Artistic Art Forum [P] Ltd

Chennai Gallery: No. 113, G. N. Chetty, Road, “Ankur Plaza” Shop. No. 5, Basement, (Near Vani Mahal) T. Nagar, Chennai – 600 017. Ph: 91 44 – 28151186 / 90 / 76049 59001 Director Mob: 91 94444 15904 / 91 95001 18599 E-mail id: gallery.chennai@artisticks.co.in.

Coimbatore Gallery: No. 79/1 A, Praveen Plaza, Sir Shanmugam Road , Near Samsung Showroom, RS Puram, Coimbatore - 641002. Phone: 91 76049 59007, Mob: 91 94444 15908 Director Mob: 91 94444 15904 / 91 95001 18599 Email id: gallery.kovai@artisticks.co.in

Madurai Gallery: No. 239, LIG Colony, Ground Floor, K.K Nagar, Madurai - 625 020. Landmark: Near Royal Enfield Show Room. Ph: 91 76049 59008 Mob: 91 94458 61673 / Director Mob: 91 94444 15904 / 95001 18599 Email id: gallery.madurai@artisticks.co.in

Bangalore Gallery: Door no. 3802/E, 1st floor, MKB PLAZA, 7th Main, Near ESI Hospital, HAL 2nd Stage, Indira nagar, Bangalore - 560 038. Ph: 91 80 2521 3684, 91 82201 50777 Director Mob: 91 92431 68625 / 91 94444 15902 Email id: gallery.bangalore@artisticks.co.in

Hyderabad Gallery: Plot no 66 , 1st floor Above Fenesta, Near Madhapur police station, Opp D Mart, Kavuri hills road, Jubilee hills, hyderabad -500033. Phone 91 40 23548738 Mob: 91 92462 68622 Director Mob: 94444 15902 E-mail id: gallery.hyderabad@artisticks.co.in

Vijayawada Gallery: Door No: 59A-7-31/1, Flat No: 66, Near Maris Stella College, Sai baba temple road, RTC Colony II road, Vijayawada – 520 008 Ph: 91 866 – 2489898 Mob: 91 92462 68627 / 91 92462 68630 Director Mob: 91 94444 15902 E-mail id: gallery.vijayawada@artisticks.co.in

Vizag Gallery: 1-104-25, Ground floor, Plot no. 21, Sector – 5, TTD Kendram Office Road, Near TTD Circle, MVP Colony, Visakhapatnam, Andhra Pradesh 530017. Ph: 0891 2533969 / 91 92462 68621 Mob: 91 92462 68627 Director Mob: 91 94444 15902 Email id: gallery.vizag@artisticks.co.in

Pune : Ph: 8446080401 / 8446080403 Director Mob:9444415902, Email Id: gallery.pune@artisticks.co.in

Kerala: Mob: 91 94444 15907 / Director Mob: 91 94444 15904 / 91 95001 18599 Email id: kerala@artisticks.co.in

Customer care toll free number: 1800 425 0166

Email id : customercare@artisticks.co.in

Artistick's...

Since 1989

Pranams Handles

www.artisticks.co.in

www.metalartandartifact.com

Pranams Handles

Code : PLPH - 012

Size : W 120mm x H 1524mm

Material : Brass metal

Finish : Antique Finish

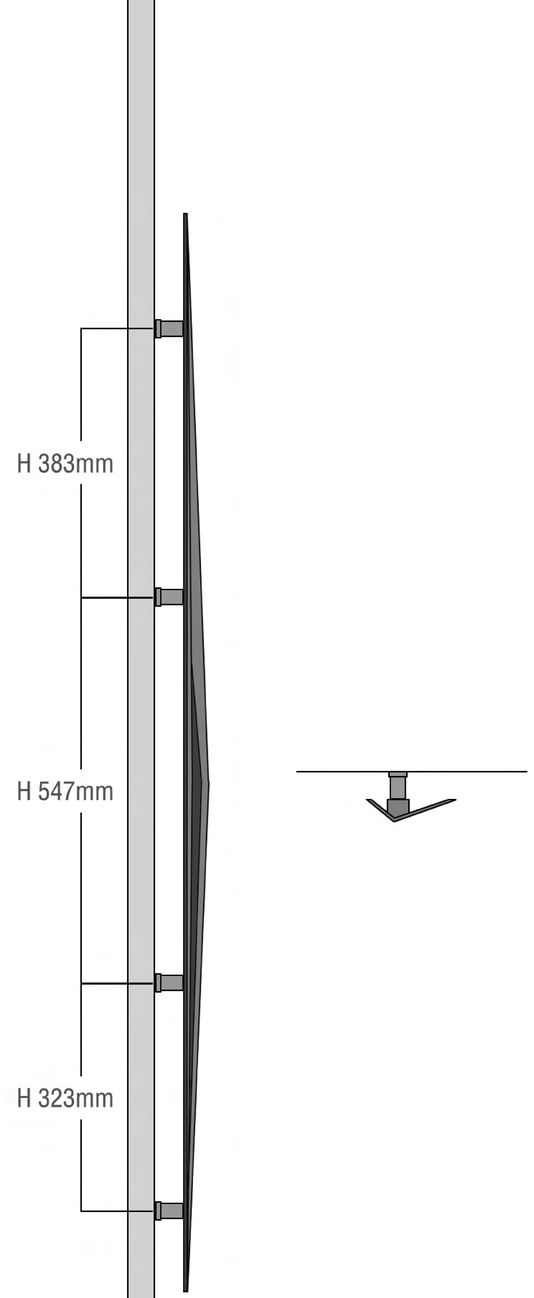

Fixing detail

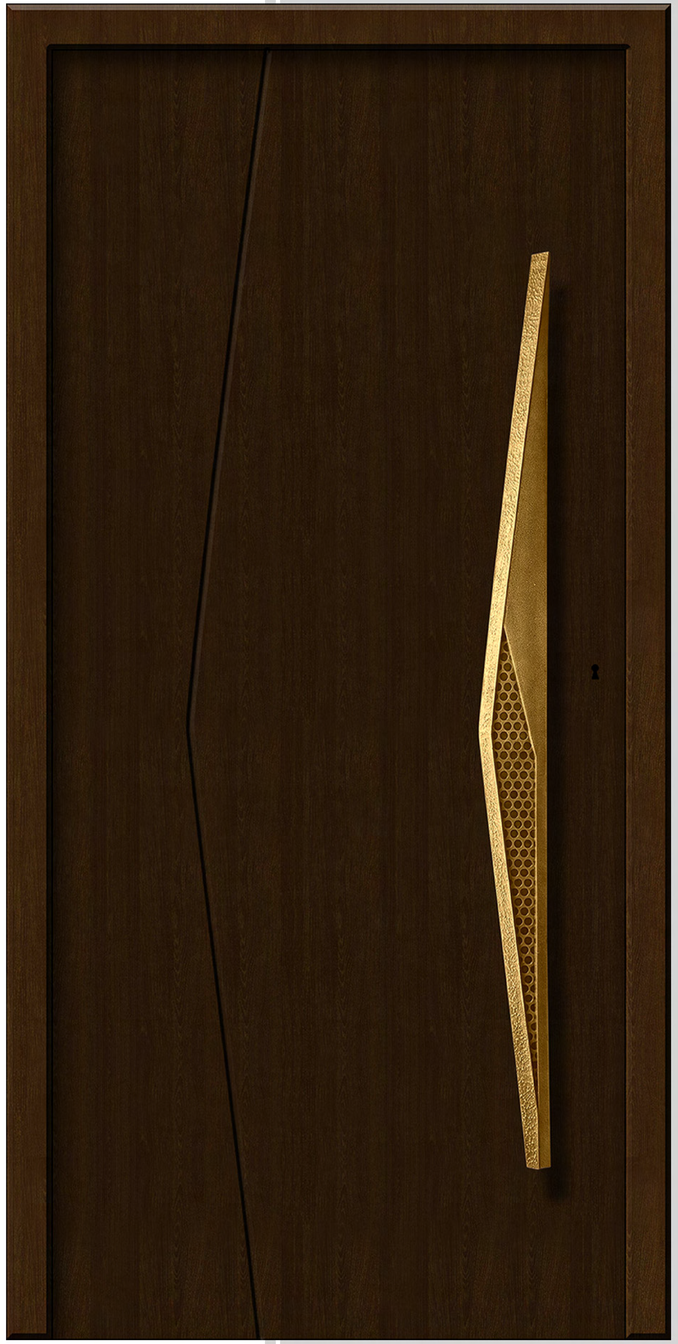

Artistick's...

Pranams Handles

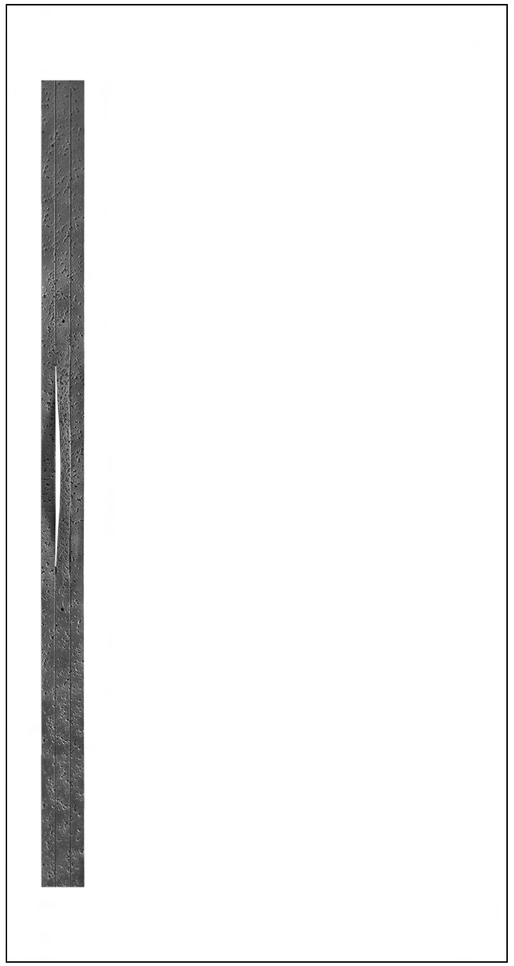

Code : PLPH - 015

Size : W 114mm x H 1803mm

Material : Copper metal

Finish : Antique Finish

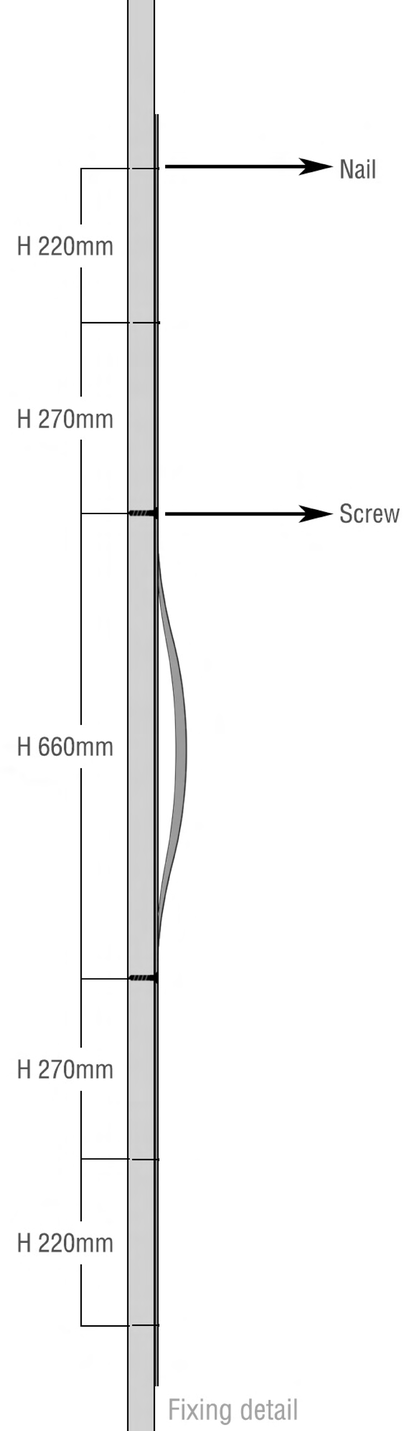

Fixing detail

Artistick's...

Pranams Handles

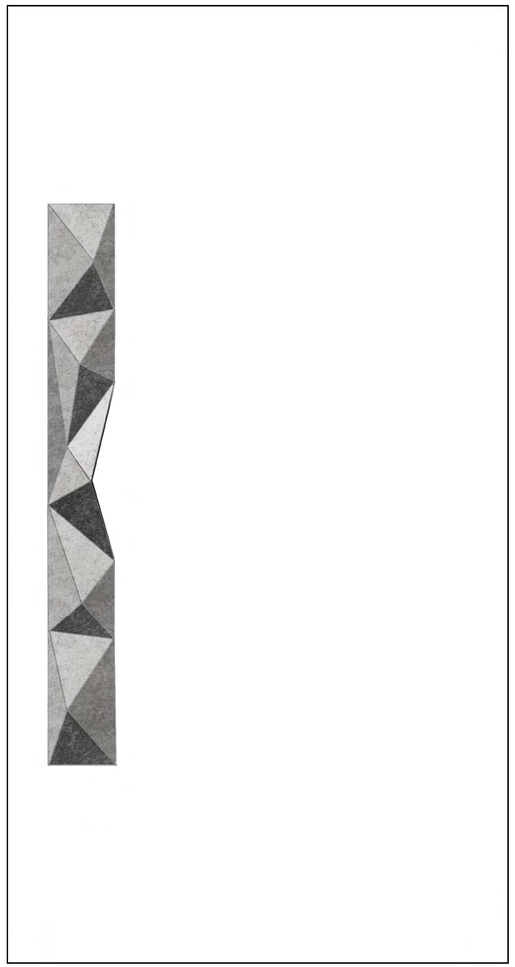

Code : PLPH - 054

Size : W 158mm x H 1270mm

Material : White metal

Finish : Antique Finish

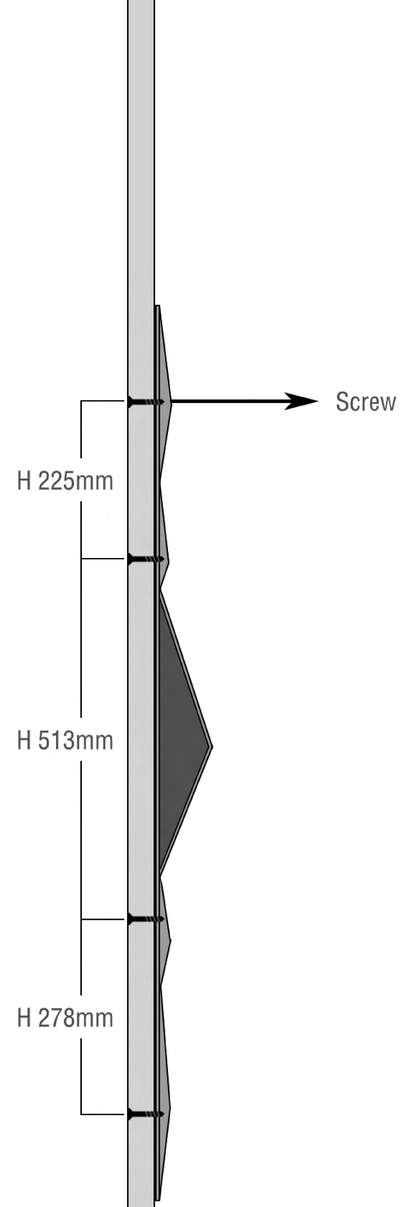

Fixing detail

Artistick's...

Pranams Handles

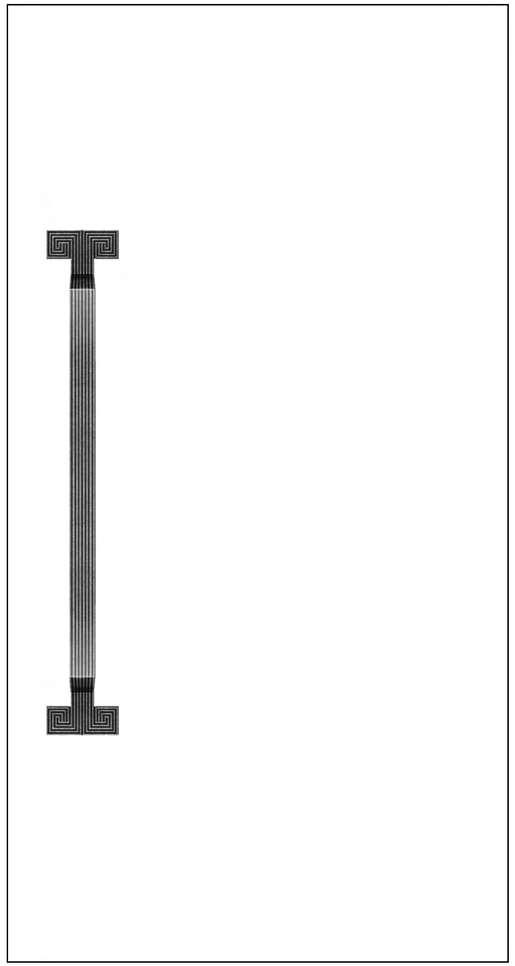

Code : PLPH - 050

Size : W 157mm x H 1089mm

Material : White metal

Finish : Antique Finish

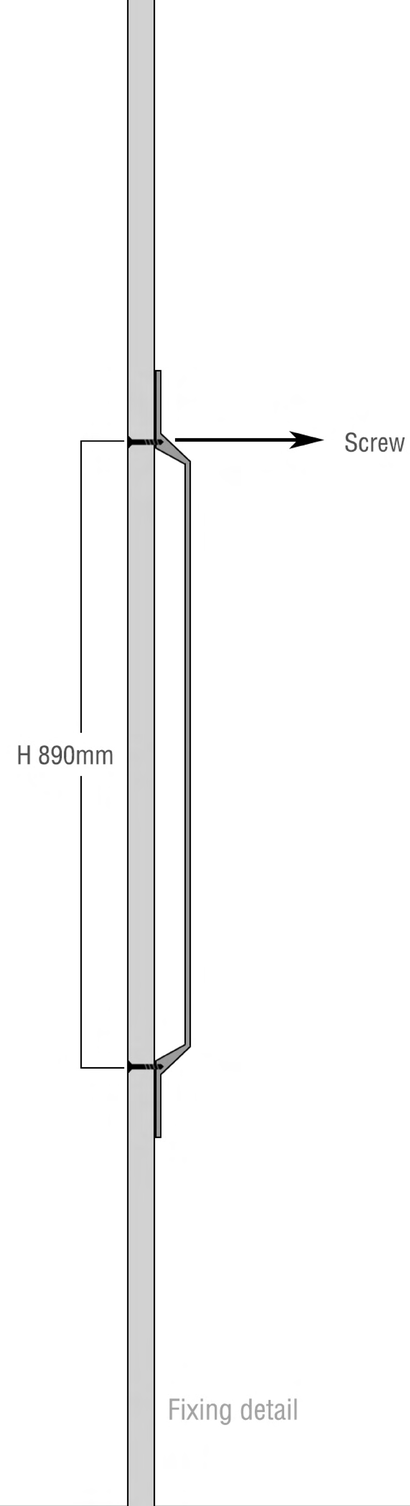

Fixing detail

Artistick's...

Pranams Handles

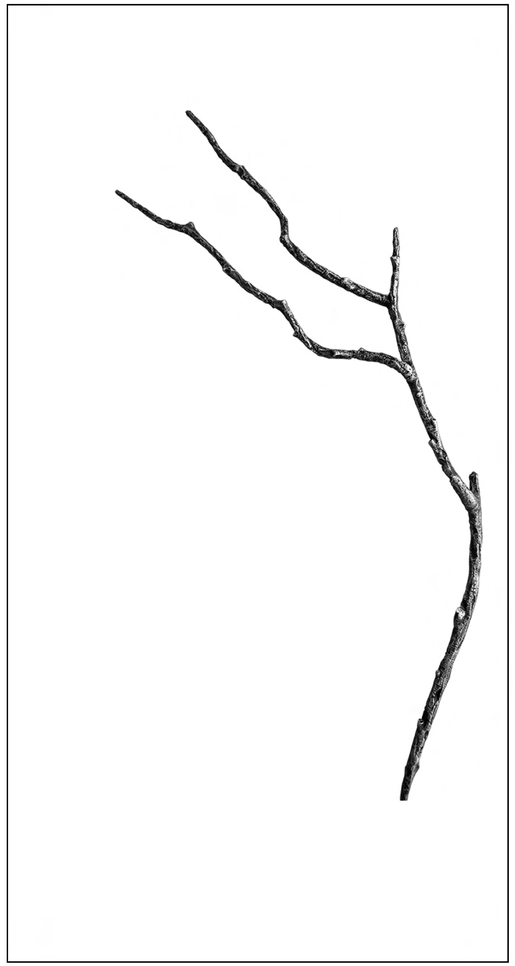

Code : PLPH - 035

Size : W 584mm x H 1524mm

Material : Brass metal

Finish : Antique Finish

Fixing detail

Artistick's...

Pranams Handles

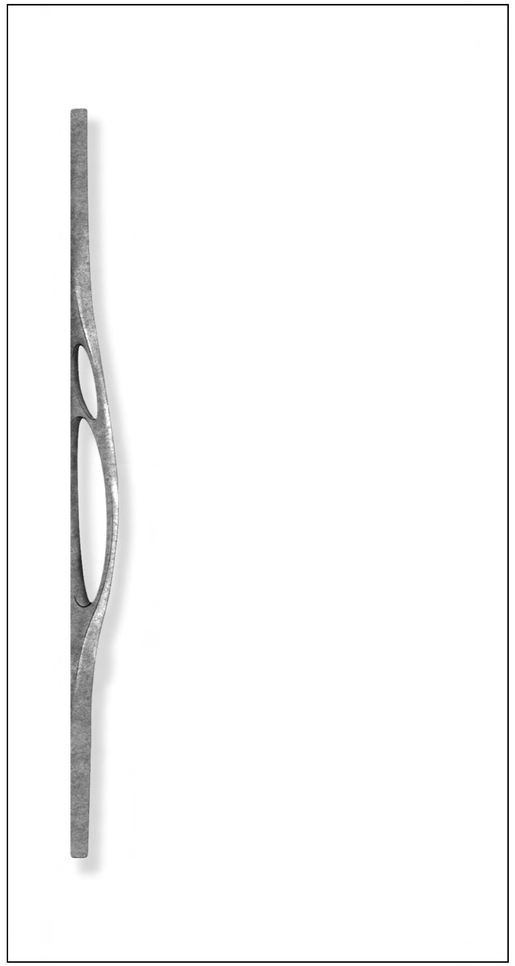

Code : PLPH - 053

Size : W 111mm x H 1685mm

Material : White metal

Finish : Matt Antique Finish

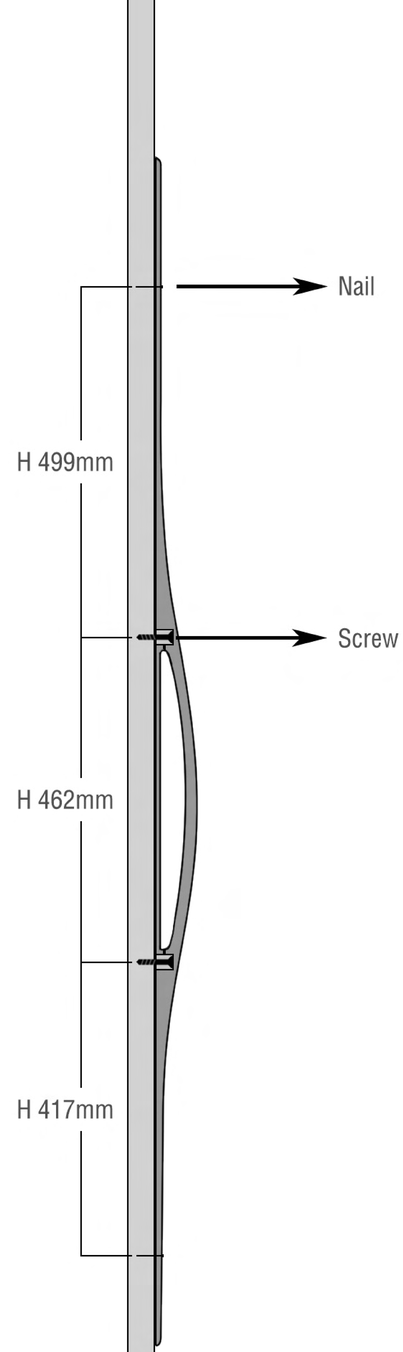

Fixing detail

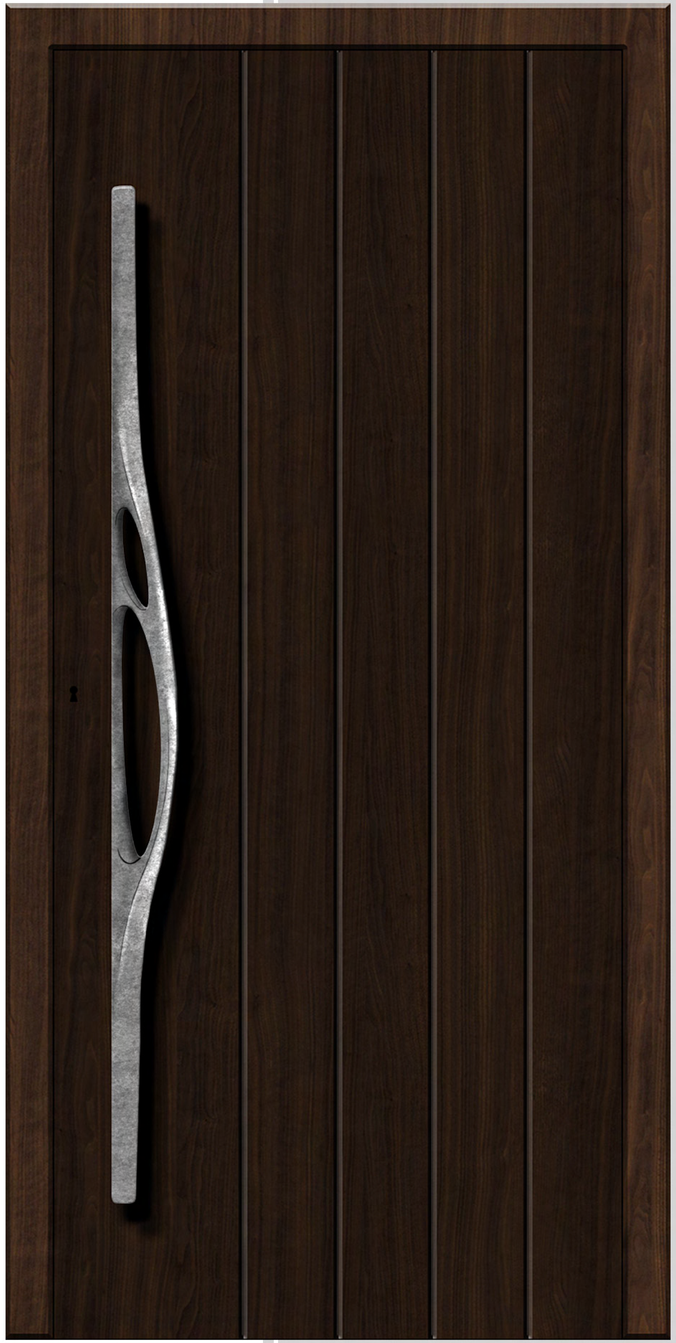

Artistick's...

Pranams Handles

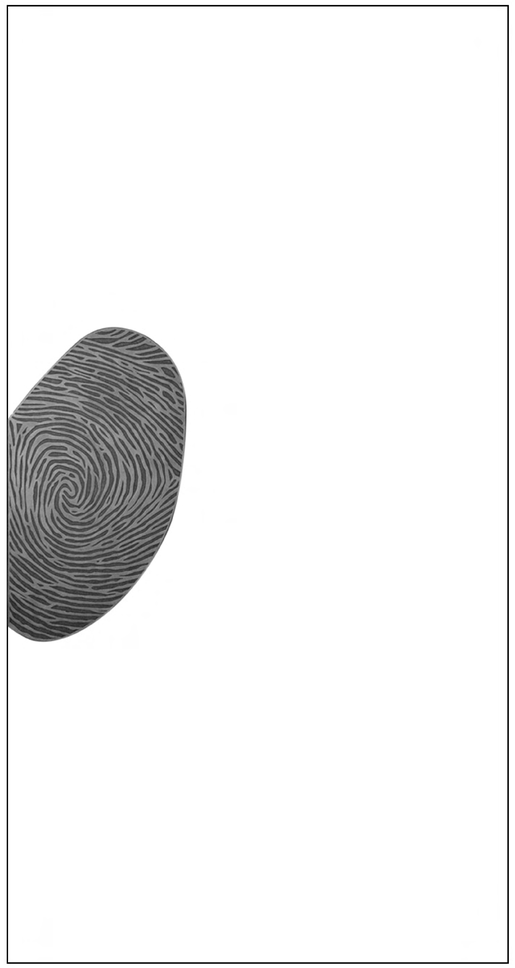

Code : PLPH - 057

Size : W 483mm x H 838mm

Material : White metal

Finish : Antique Finish

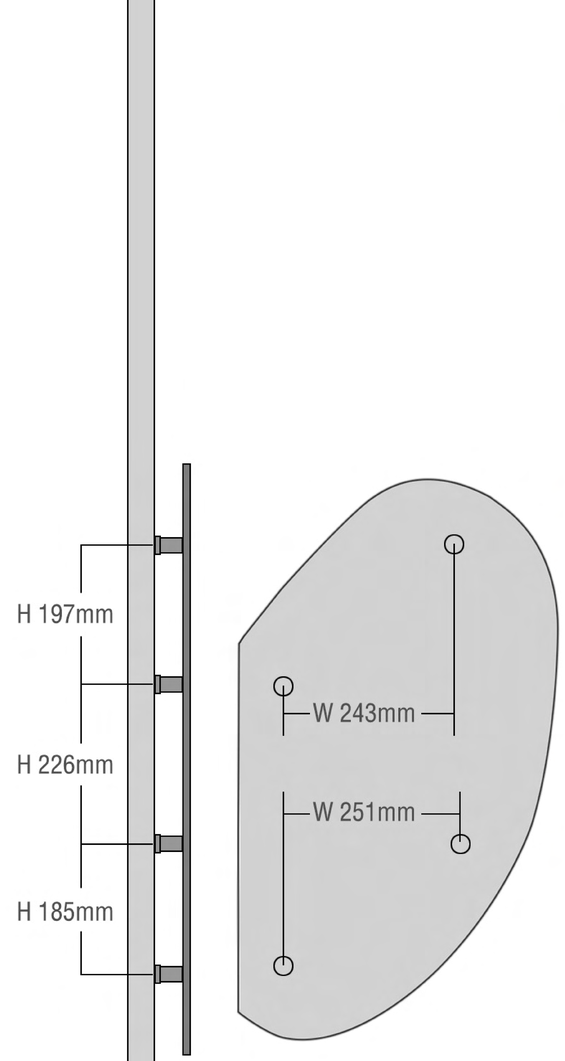

Fixing detail

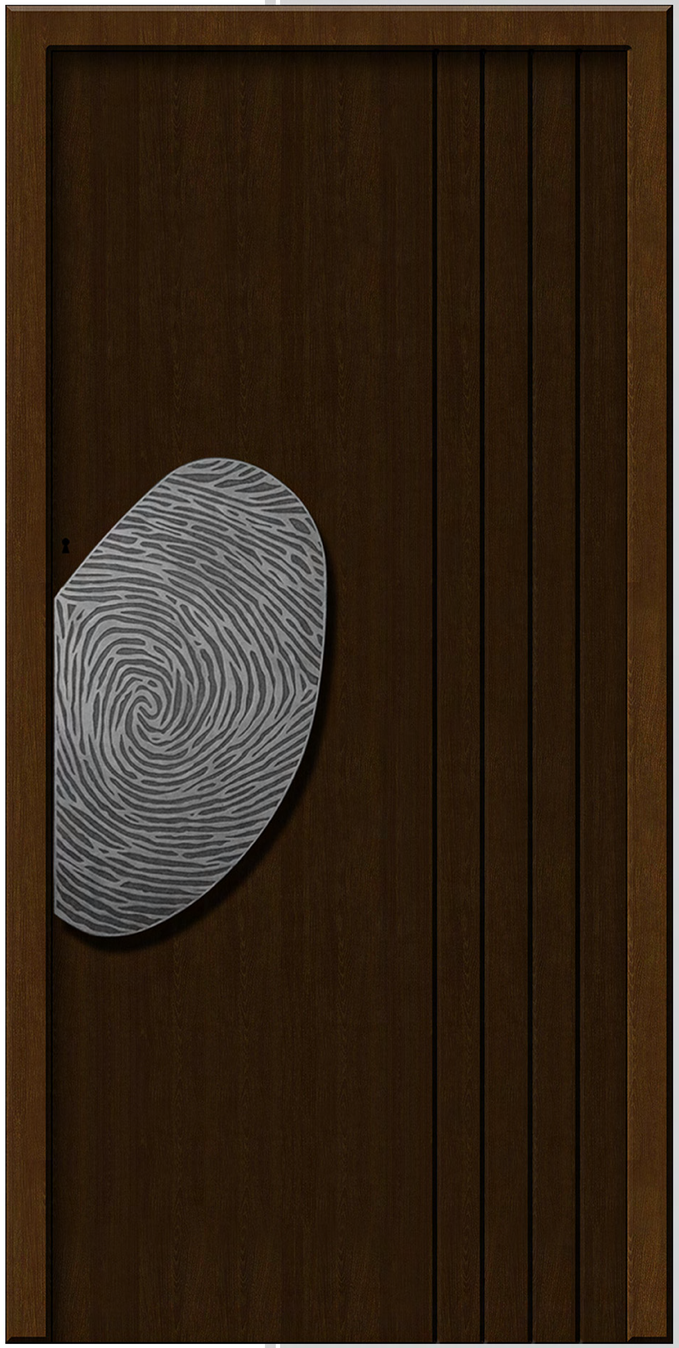

Artistick's...

Pranams Handles

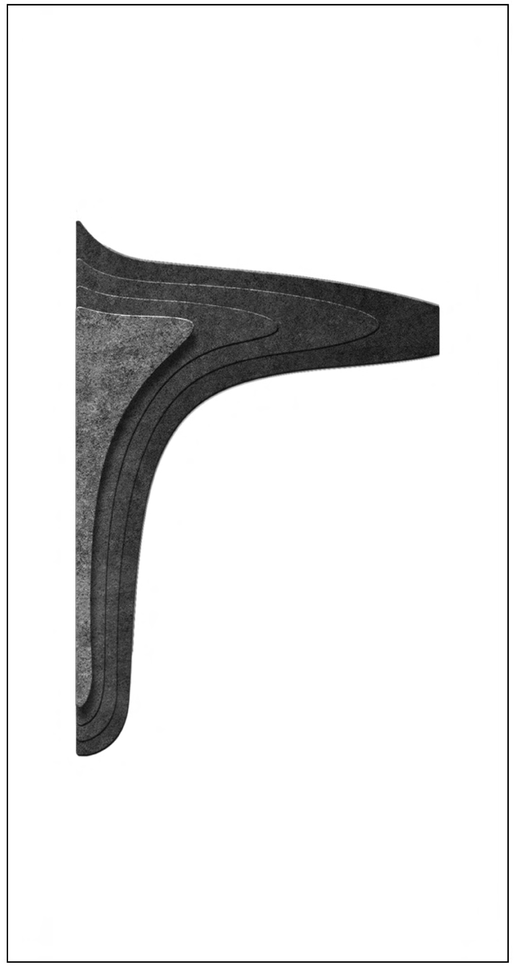

Code : PLPH - 055

Size : W 724mm x H 1067mm

Material : Copper metal

Finish : Antique Finish

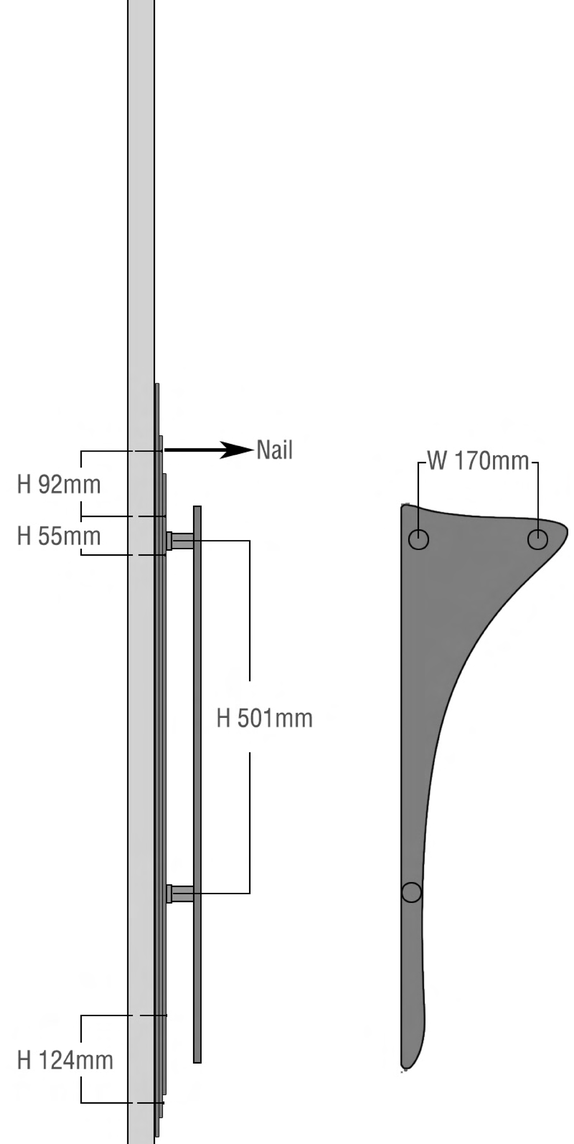

Fixing detail

Artistick's...

Pranams Handles

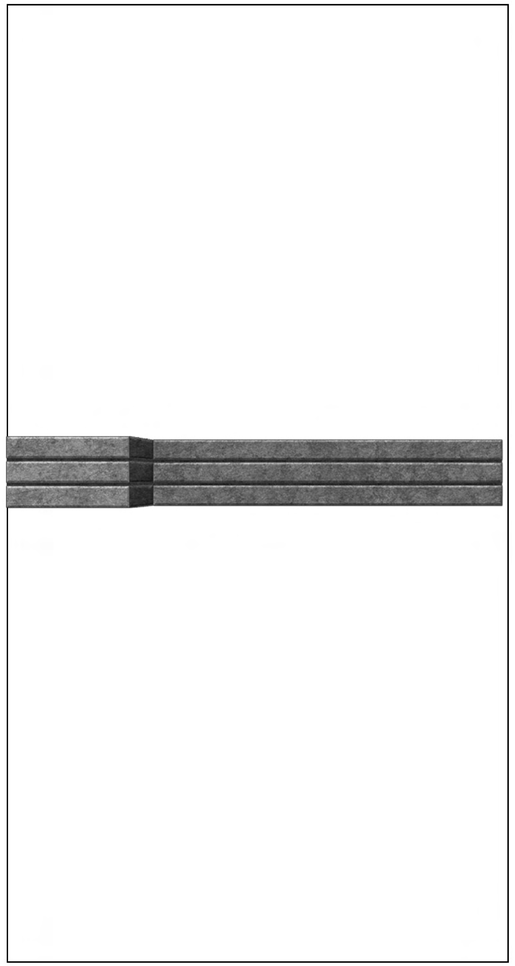

Code : PLPH - 056

Size : W 915mm x H 130mm

Material : White metal

Finish : White Metal with Brass Finish

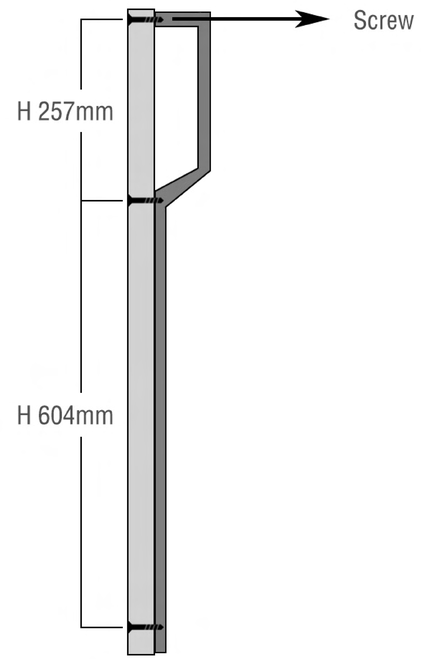

Fixing detail

Artistick's...

Pranams Handles

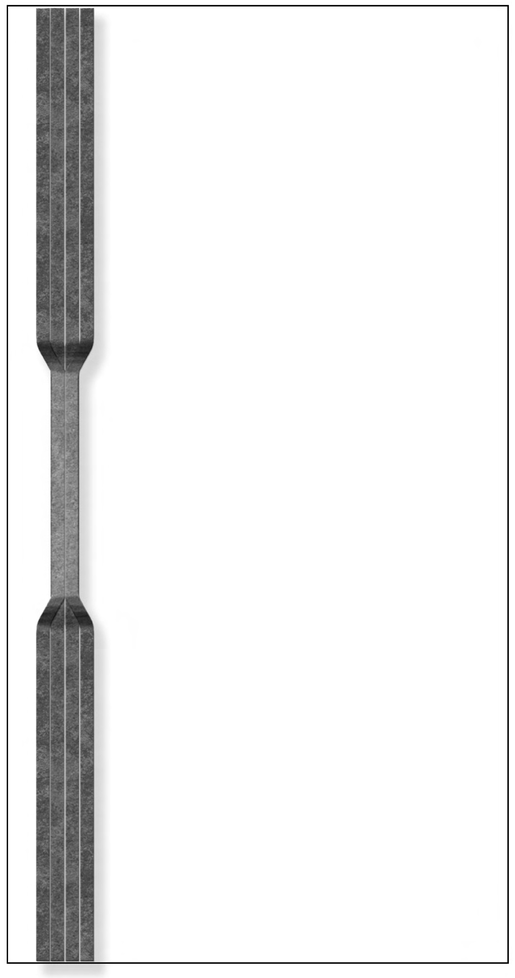

Code : PLPH - 052

Size : W 130mm x H 2096mm

Material : White metal

Finish : White Metal with Matt Antique Finish

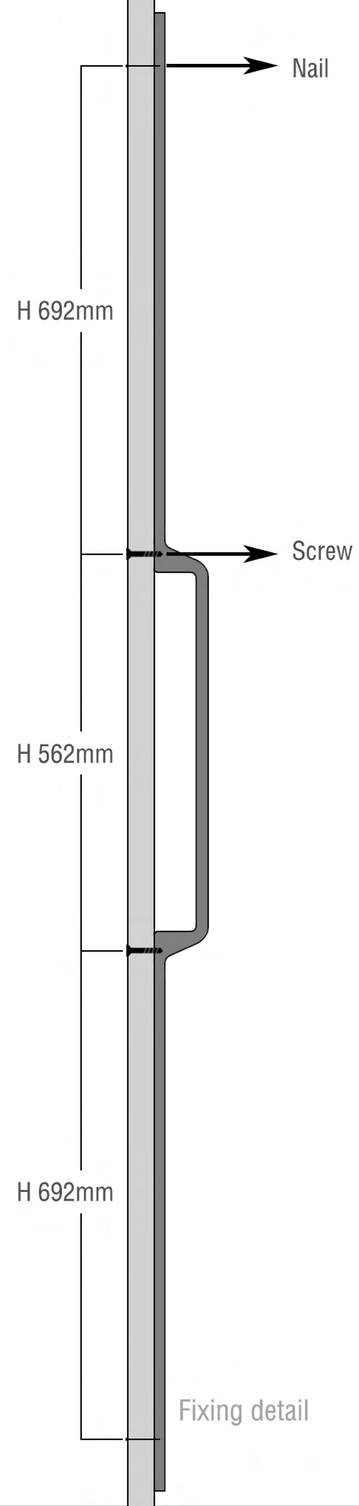

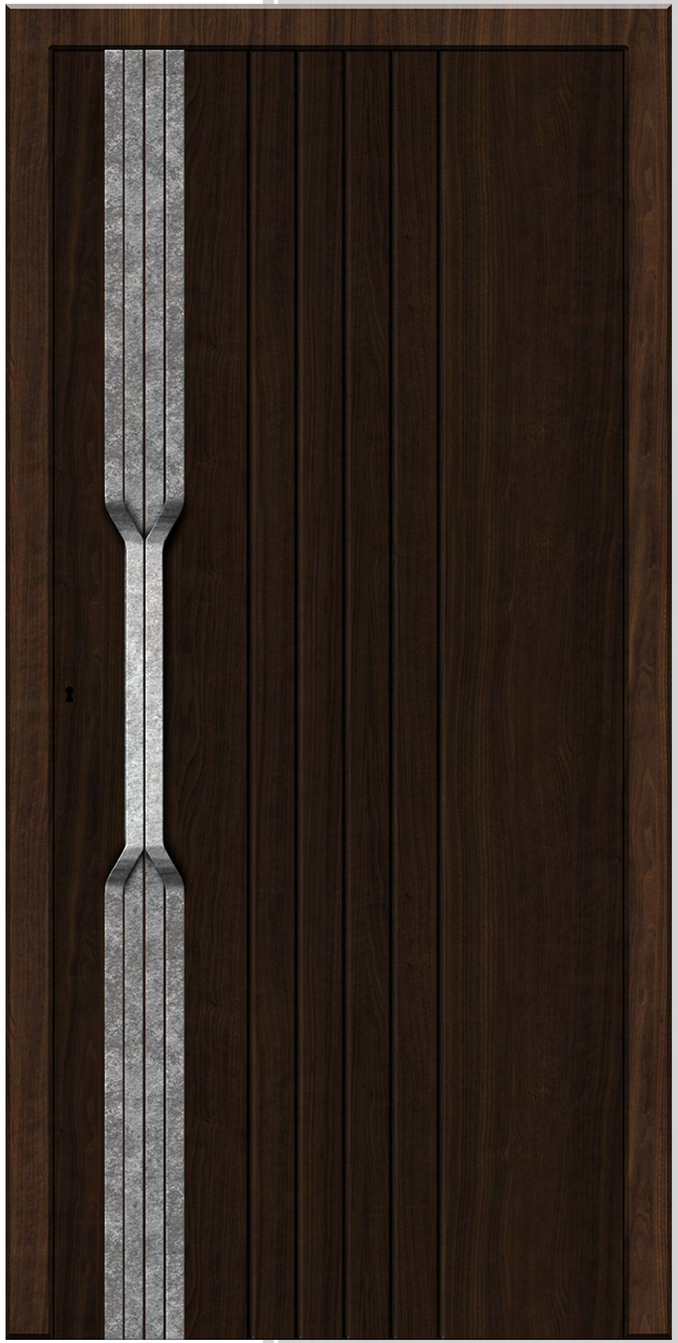

Artistick's...

Pranams Handles

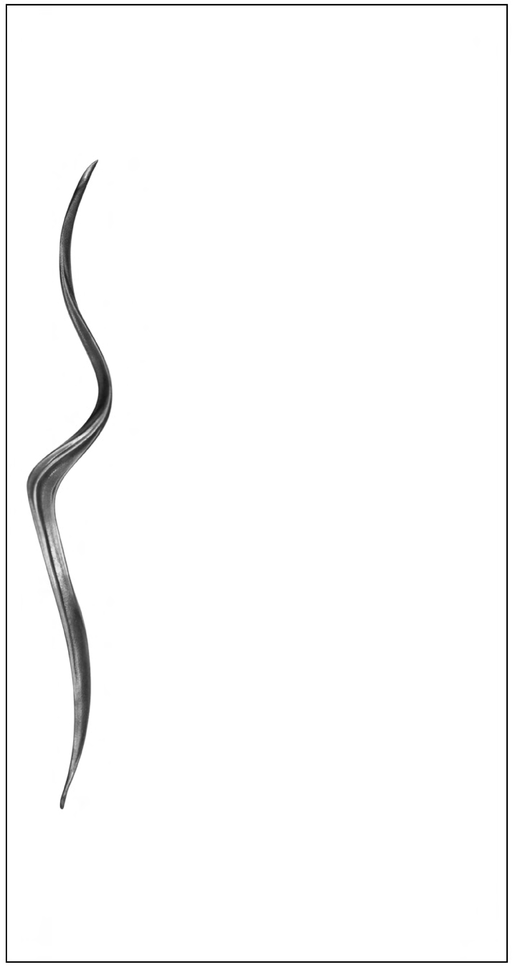

Code : PLPH - 051

Size : W 191mm x H 1499mm

Material : Brass metal

Finish : Gold Plated with Glossy Finish

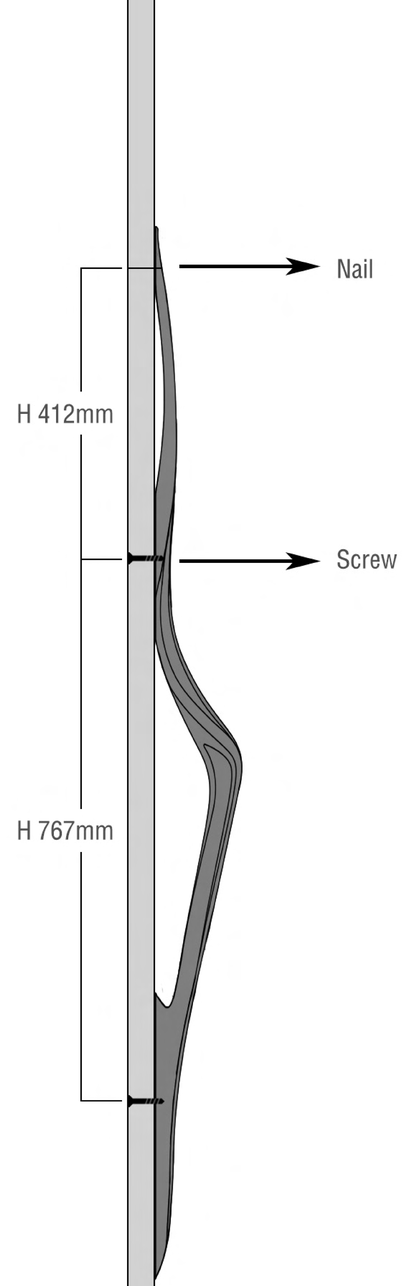

Fixing detail

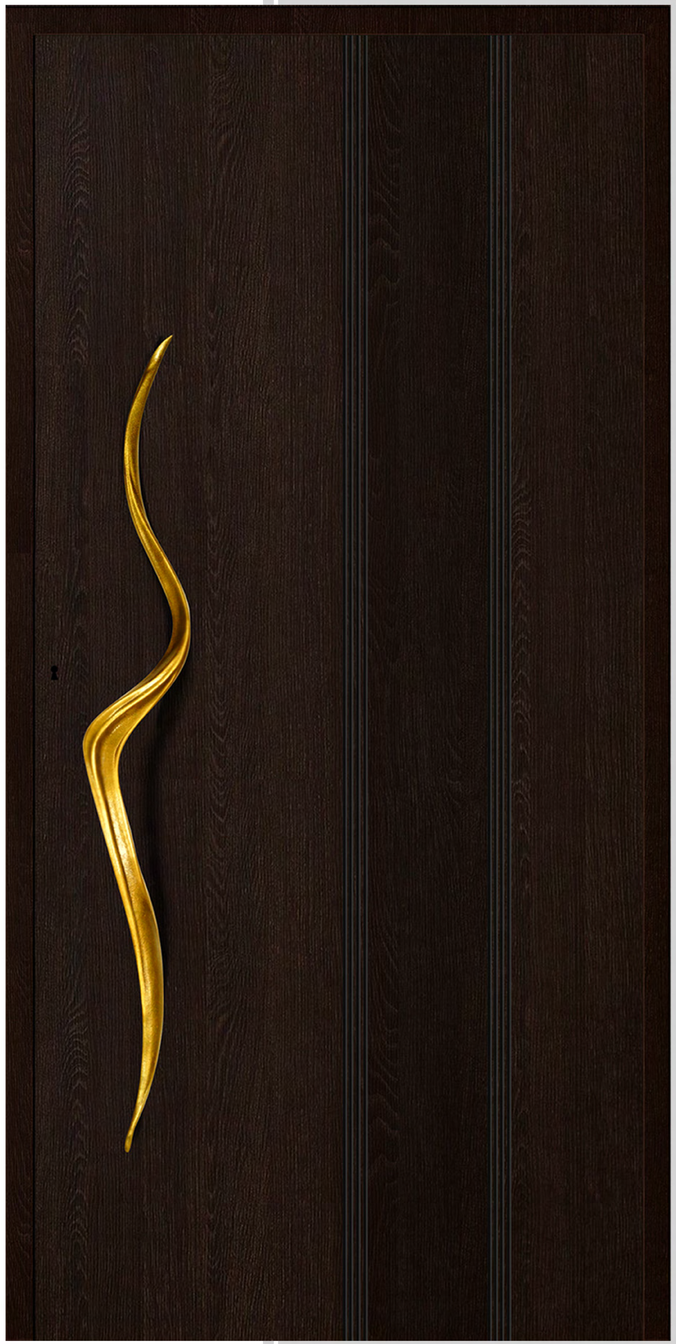

Artistick's...

Pranams Handles

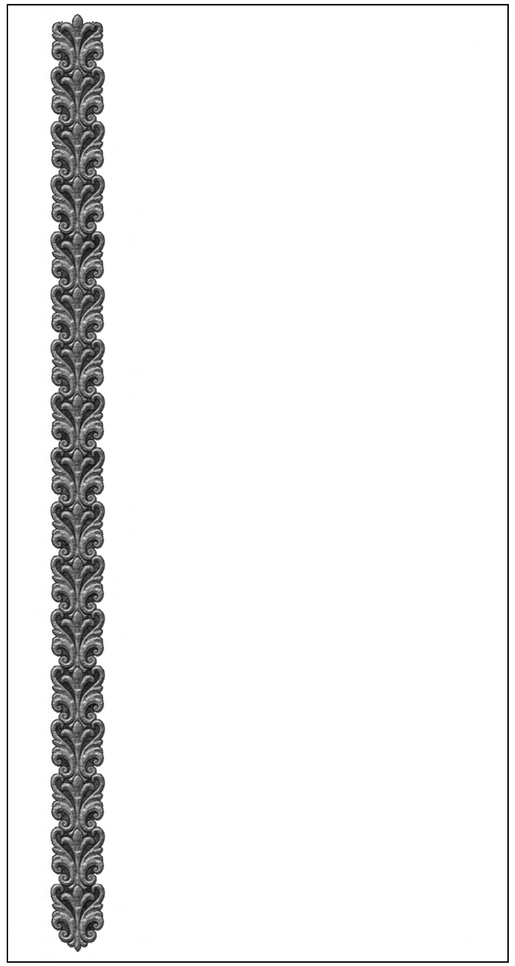

Code : PLPH - 059

Size : W 119mm x H 2061mm

Material : Brass metal

Finish : Antique Finish

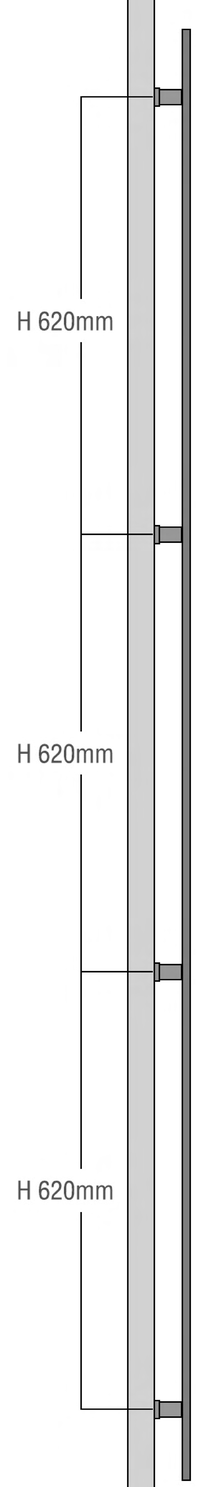

Fixing detail

Artistick's...

Pranams Handles

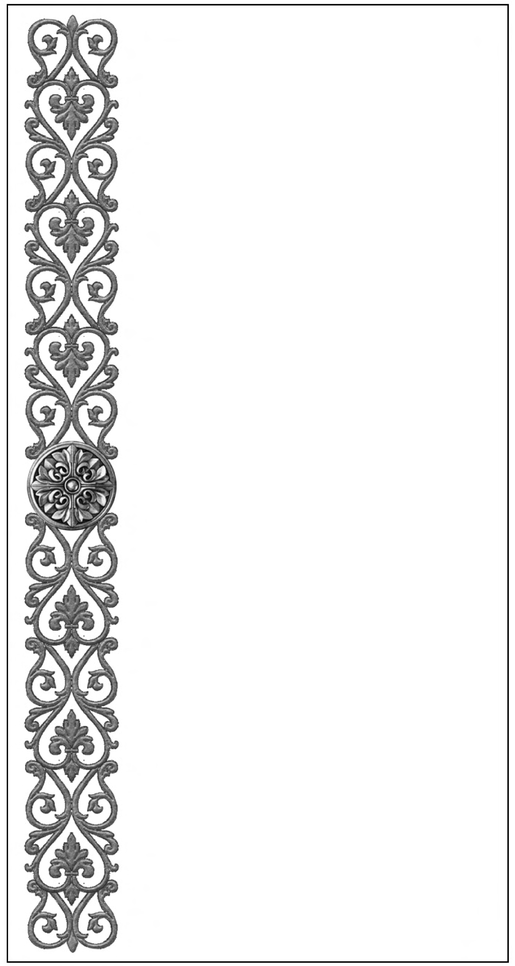

Code : PLPH - 062

Size : W 212mm x H 2108mm

Material : Brass metal

Finish : Antique Finish

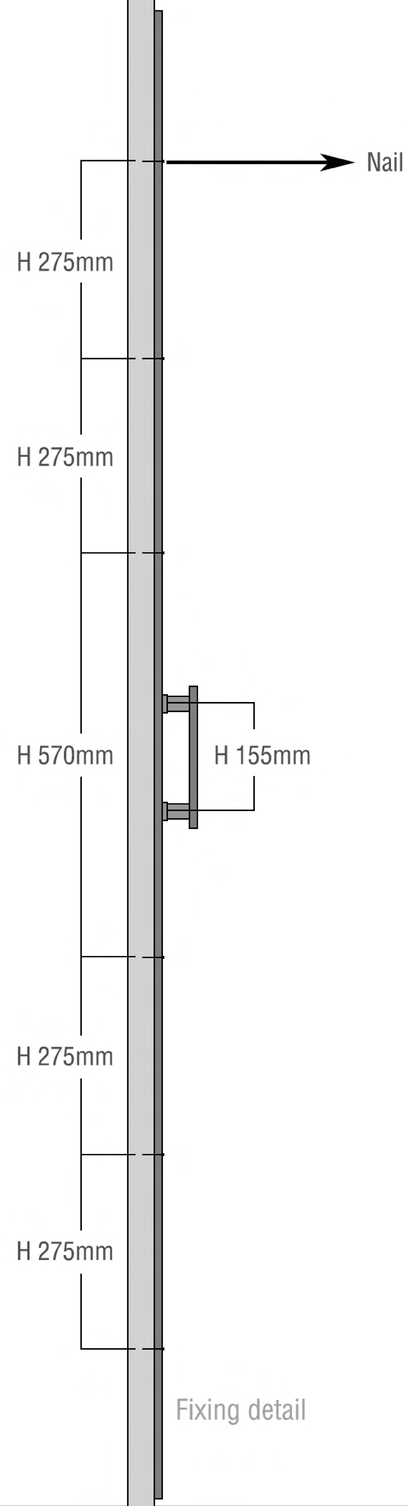

Fixing detail

Artistick's...

Pranams Handles

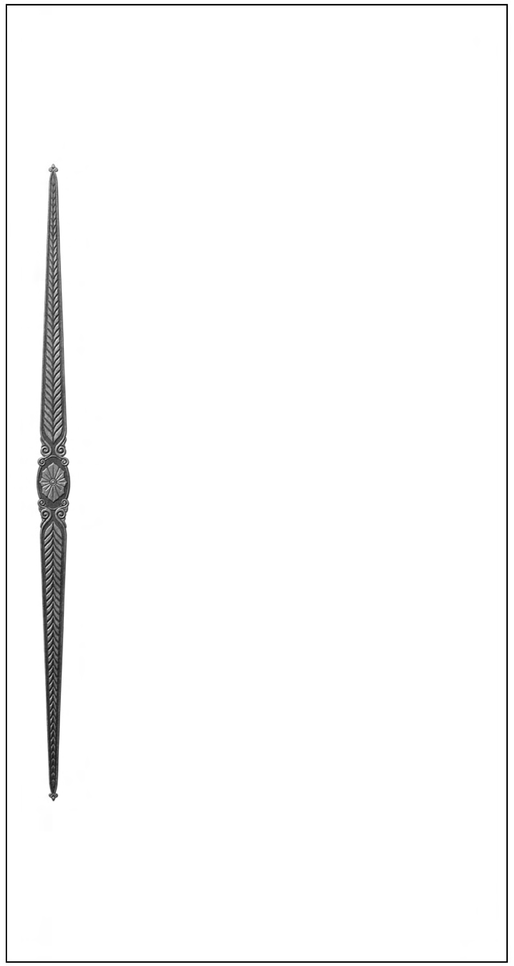

Code : PLPH - 063

Size : W 76mm x H 1470mm

Material : Brass metal

Finish : Antique Finish

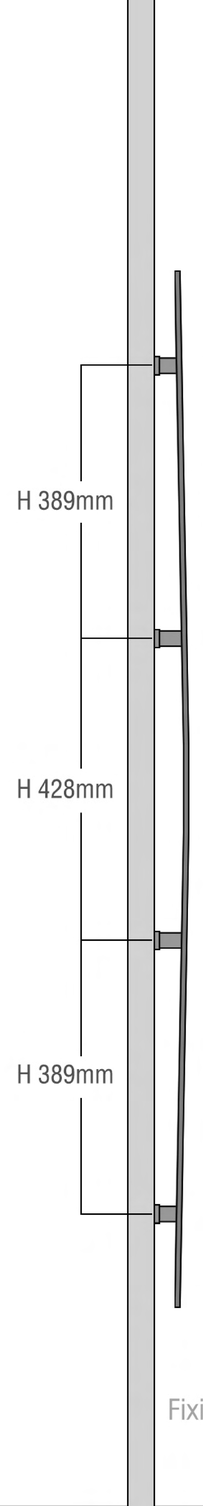

Fixing detail

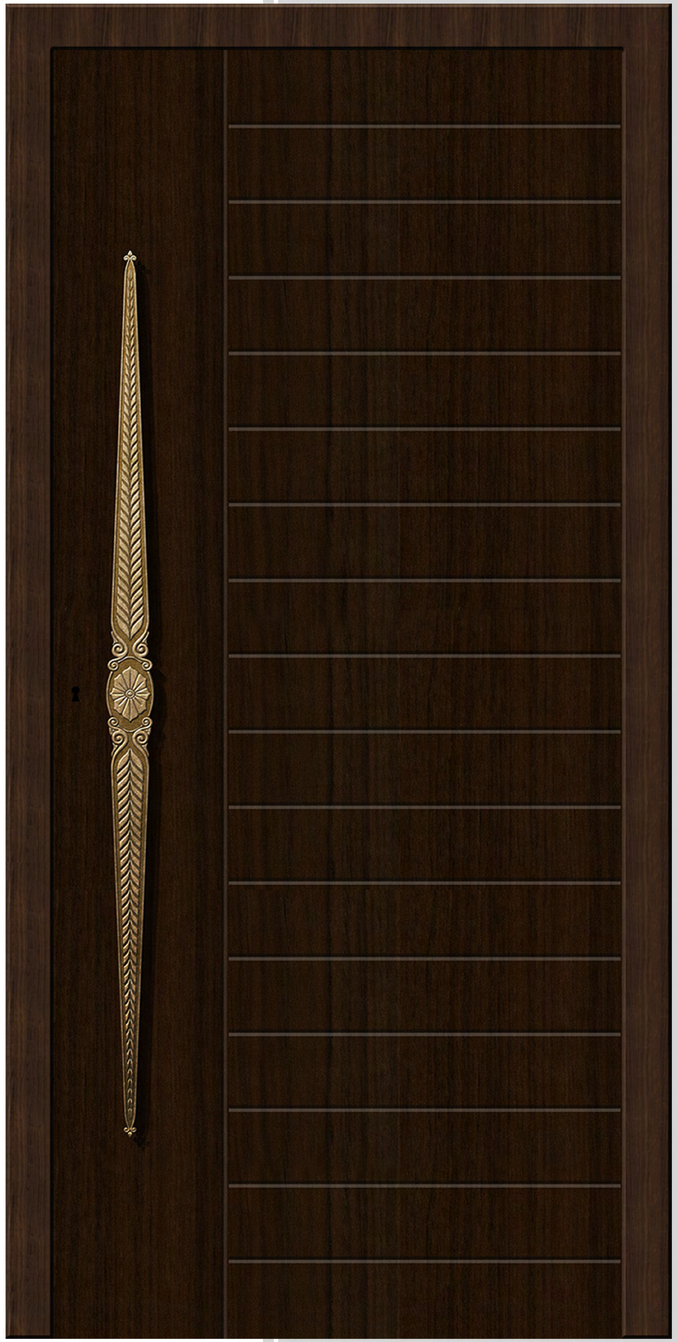

Artistick's...

Pranams Handles

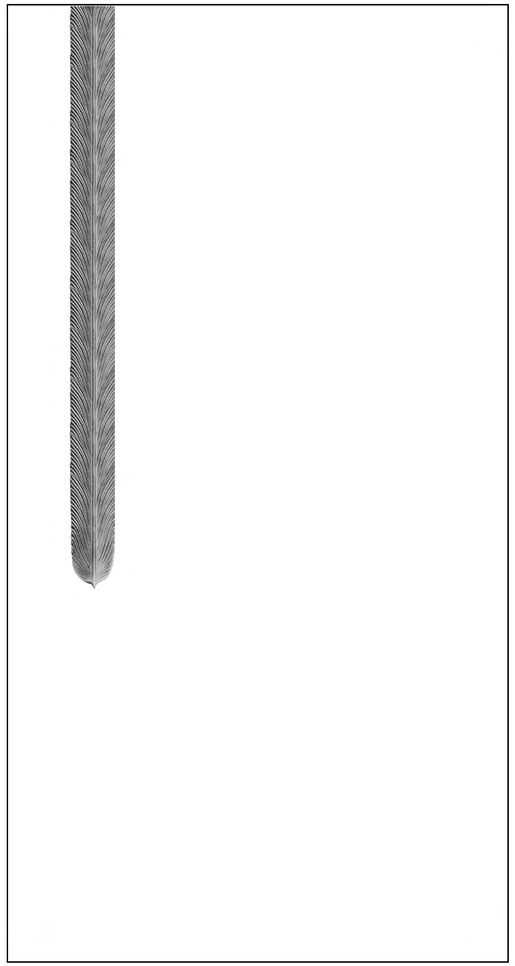

Code : PLPH - 064

Size : W 102mm x H 1336mm

Material : Brass metal

Finish : Antique Finish

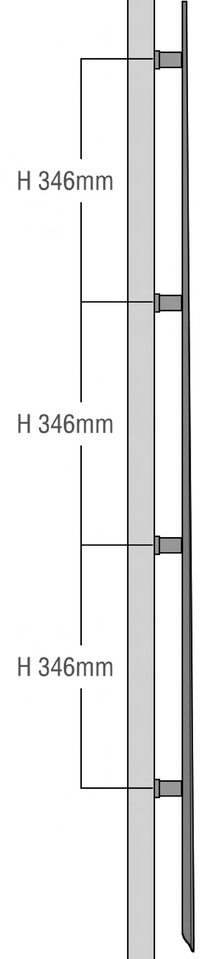

Fixing detail

Artistick's...

Pranams Handles

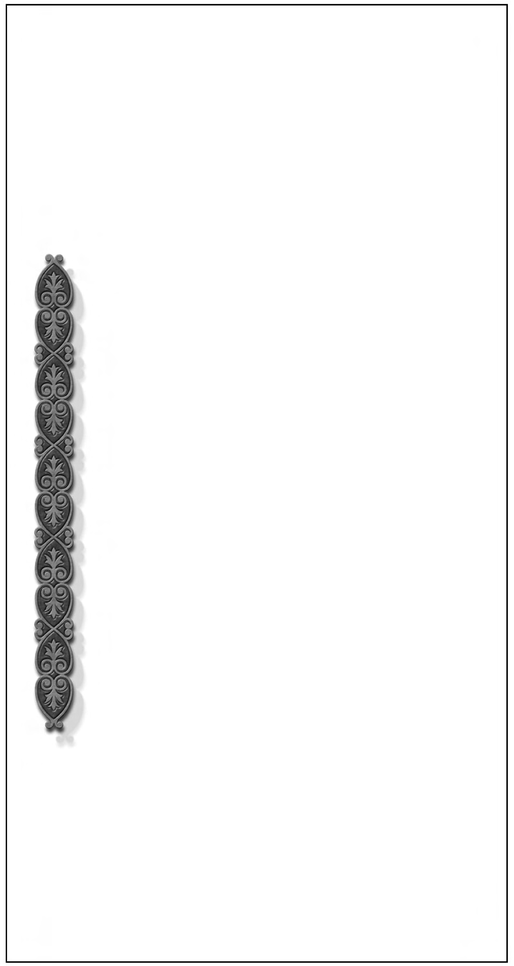

Code : PLPH - 065

Size : W 86mm x H 1041mm

Material : White metal

Finish : White Metal Brass Antique Finish

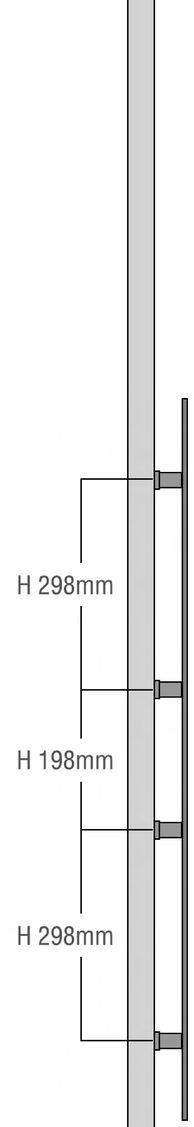

Fixing detail

Artistick's...

Pranams Handles

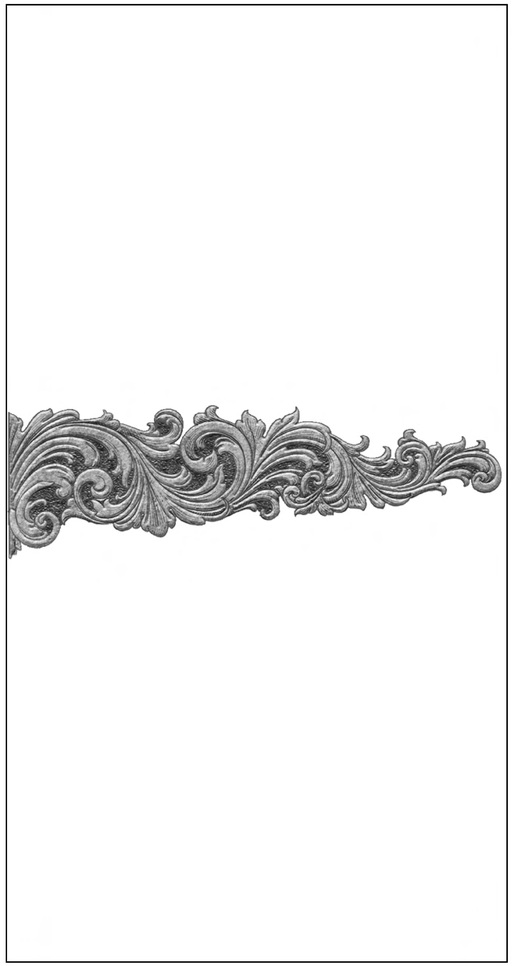

Code : PLPH - 060

Size : W 907mm x H 283mm

Material : Brass metal

Finish : Antique Finish

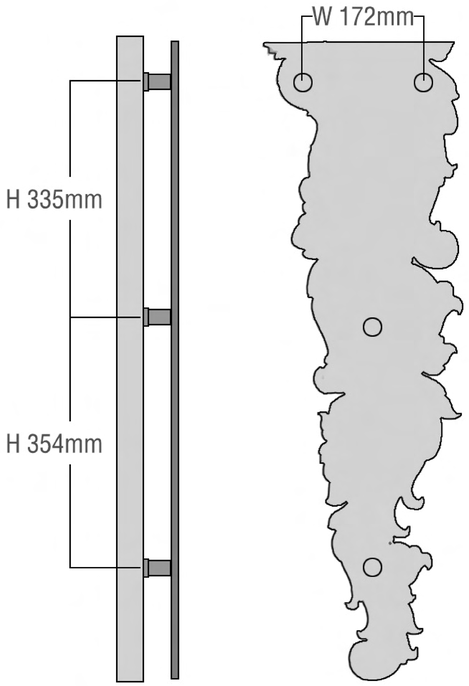

Fixing detail

Artistick's...

Pranams Handles

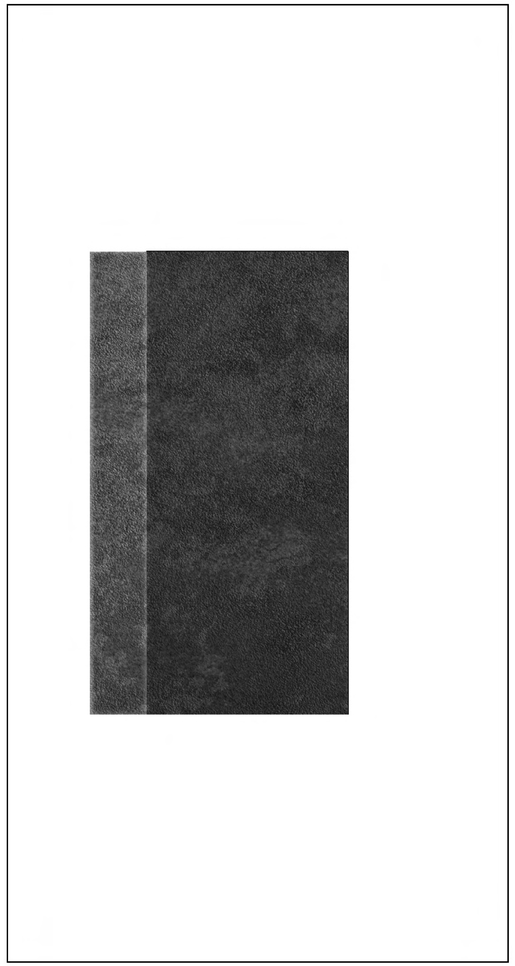

Code : PLPH - 058

Size : W 533mm x H 965mm

Material : Brass metal

Finish : Antique Finish

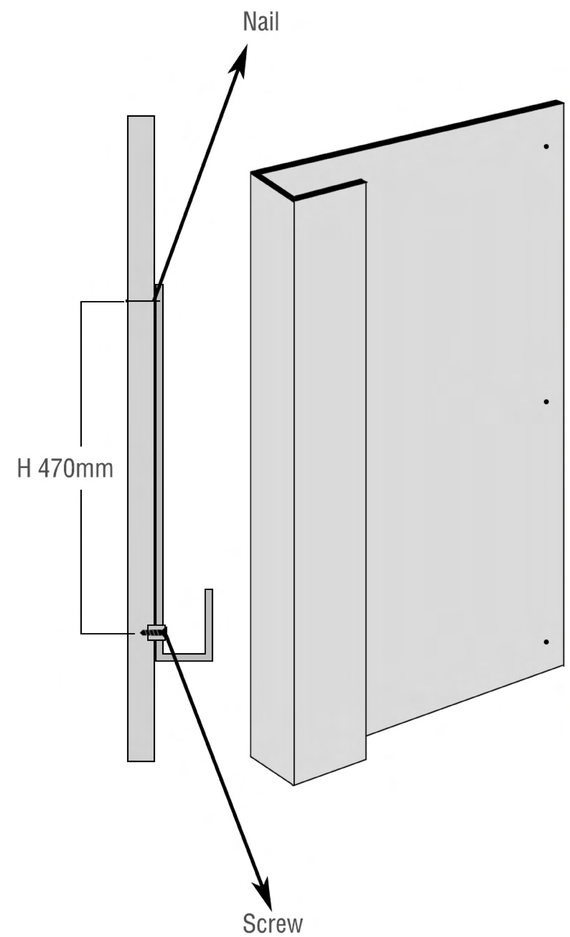

Fixing detail

Artistick's...

Pranams Handles

Code : PLPH - 061

Size : W 897mm x H 570mm

Material : Brass metal

Finish : Antique Finish

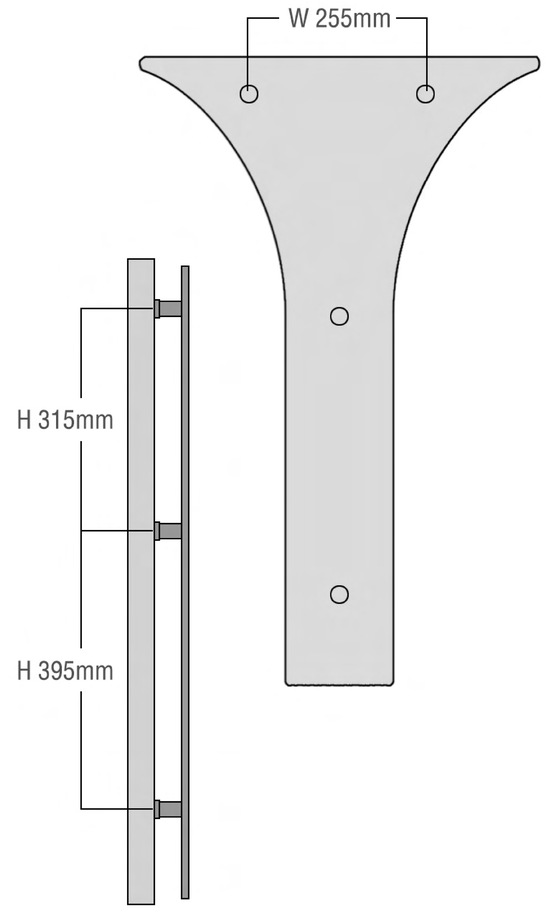

Fixing detail

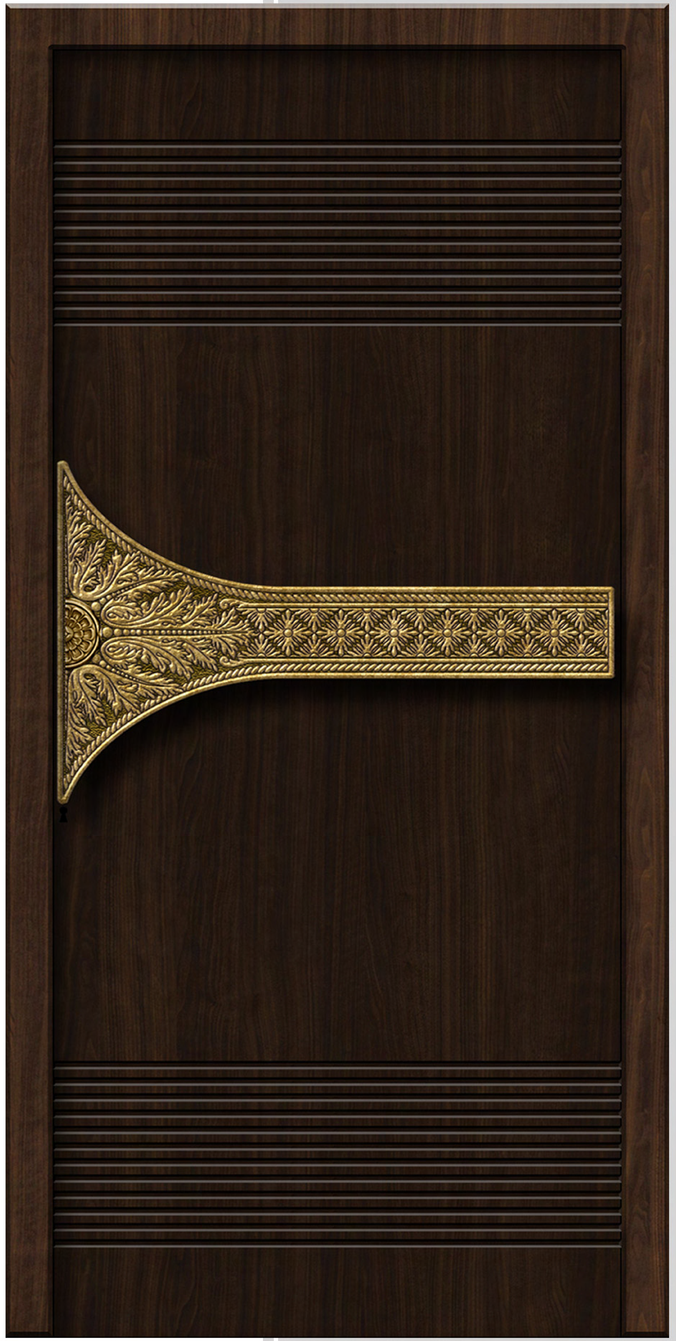

Artistick's...

Pranams Handles

Code : PLPH - 046

Size : W 152mm x H 1574mm

Material : Brass metal

Finish : Nickel Plated with Matt Antique Finish

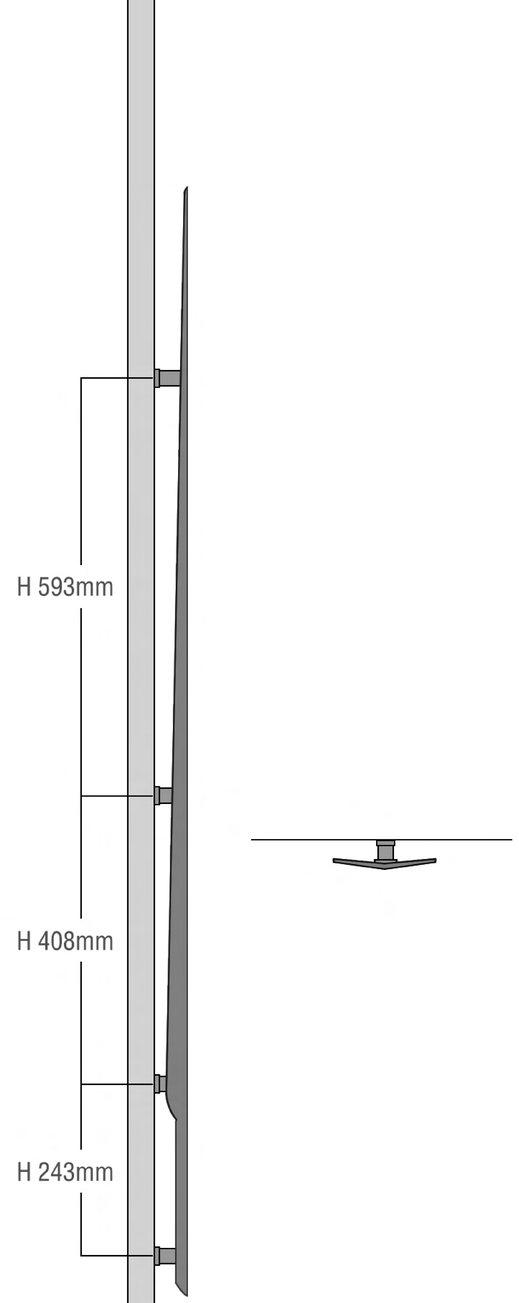

Fixing detail

Artistick's...

Pranams Handles

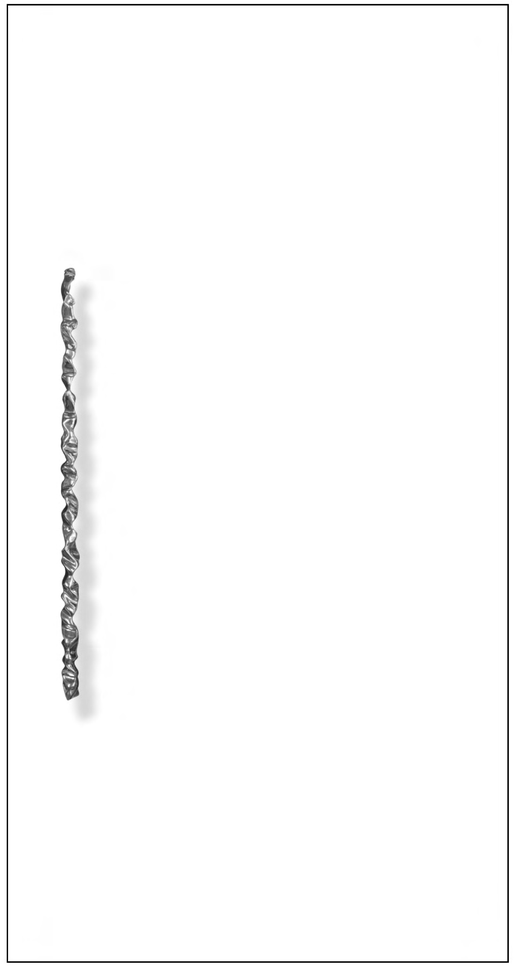

Code : PLPH - 066

Size : W 38mm x H 1000mm

Material : Brass metal

Finish : Buffing Polished with Glossy Finish

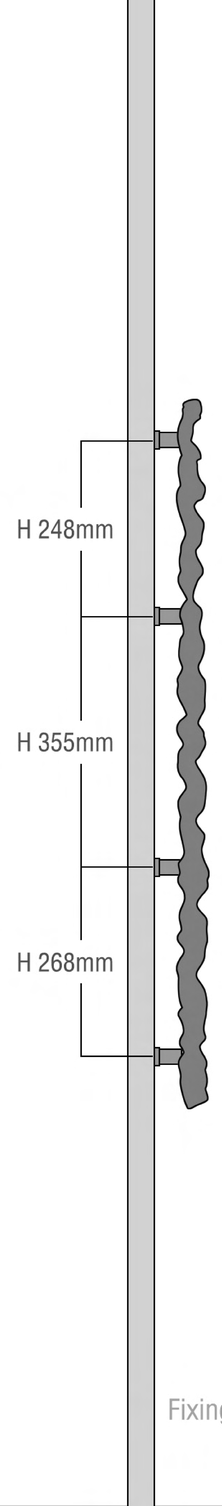

Fixing detail

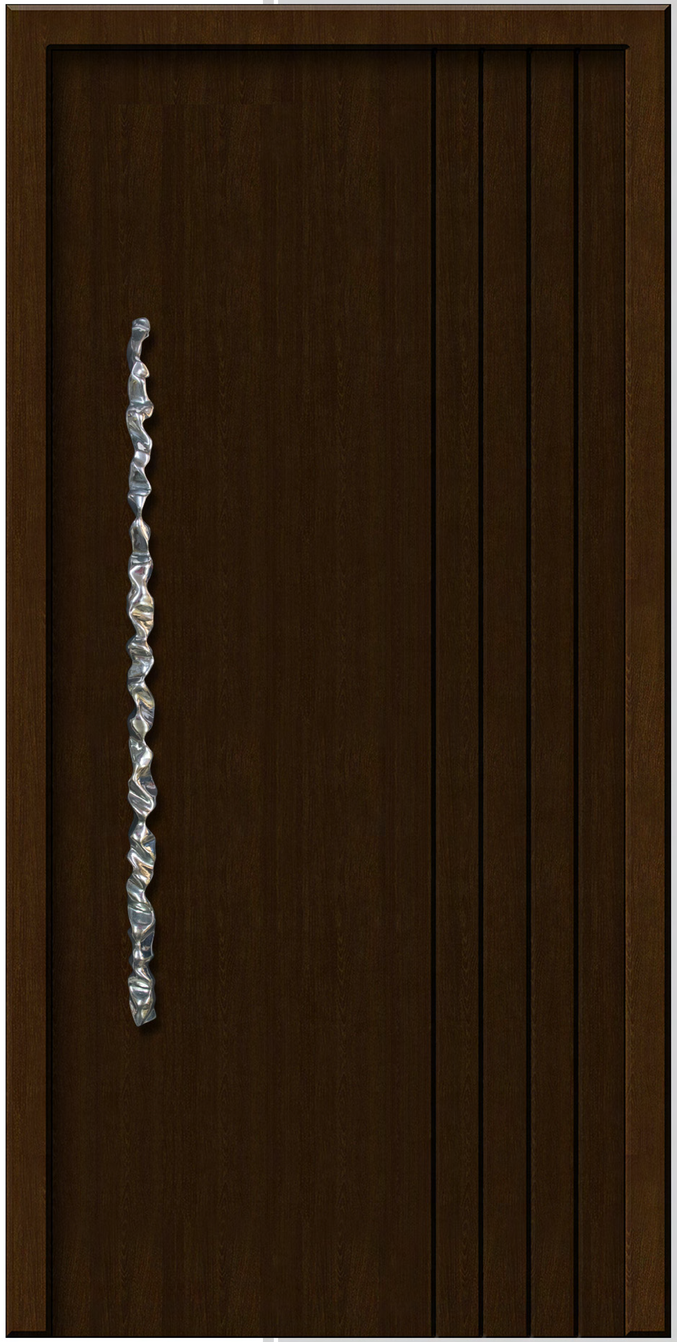

Artistick's...

Pranams Handles

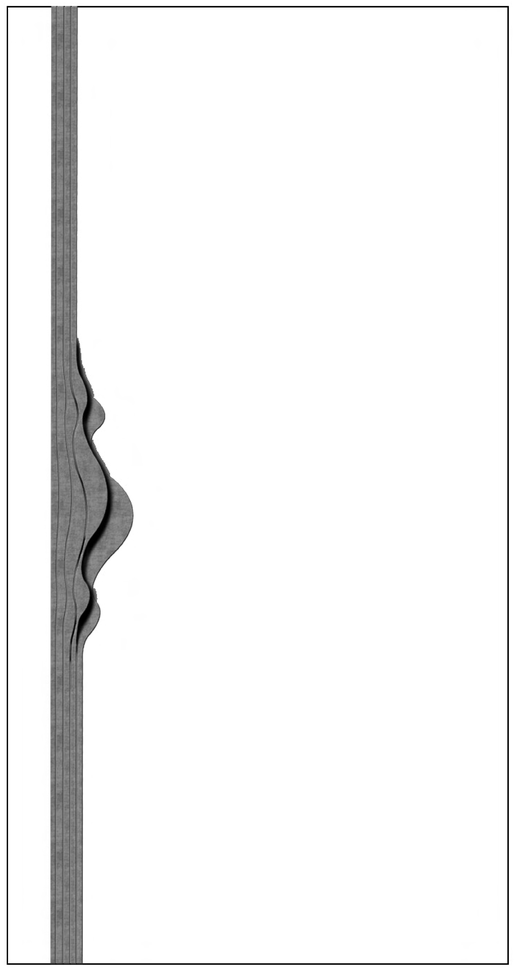

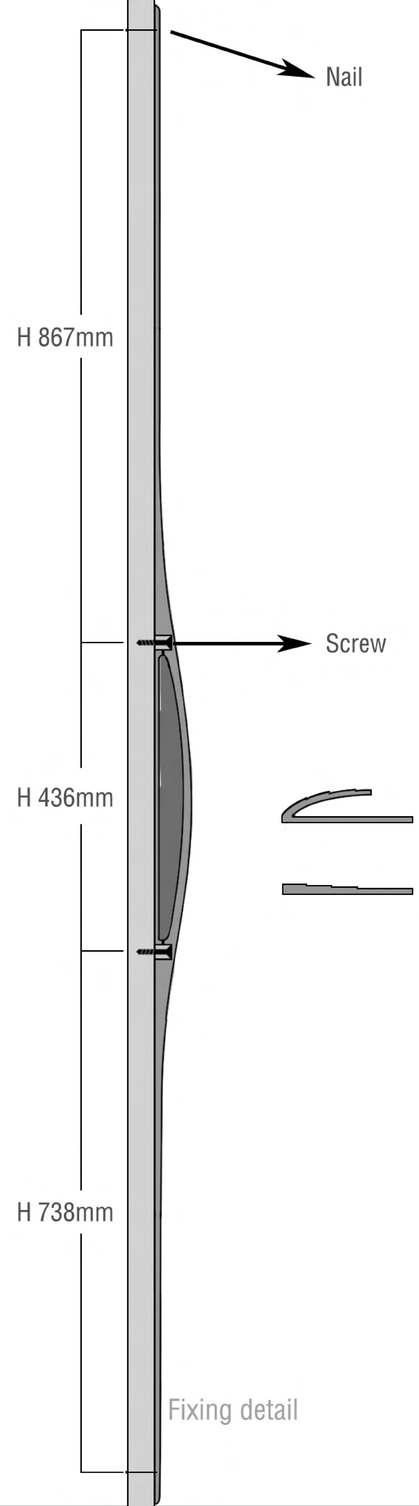

Code : PLPH - 049

Size : W 185mm x H 2137mm

Material : Brass metal

Finish : Antique Finish

Artistick's...

Pranams Handles

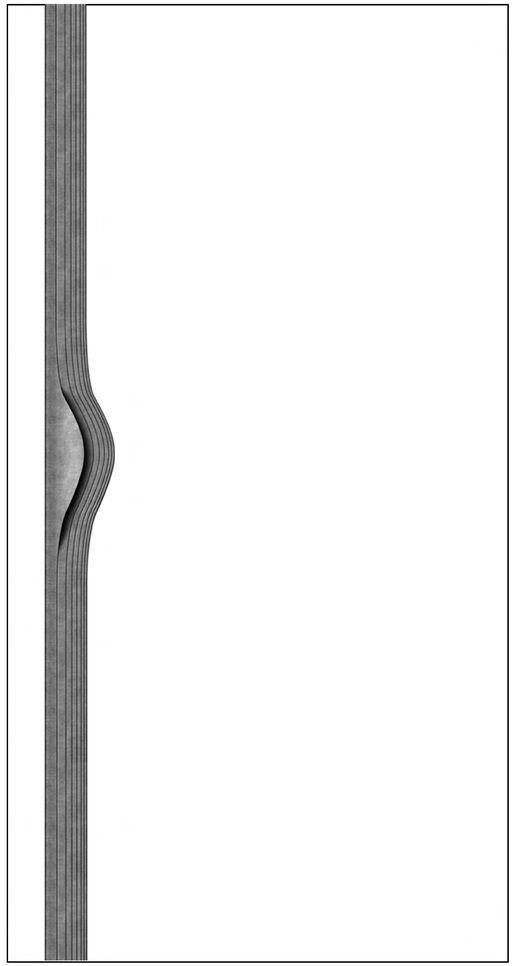

Code : PLPH - 048

Size : W 155mm x H 2137mm

Material : Brass metal

Finish : Antique Finish

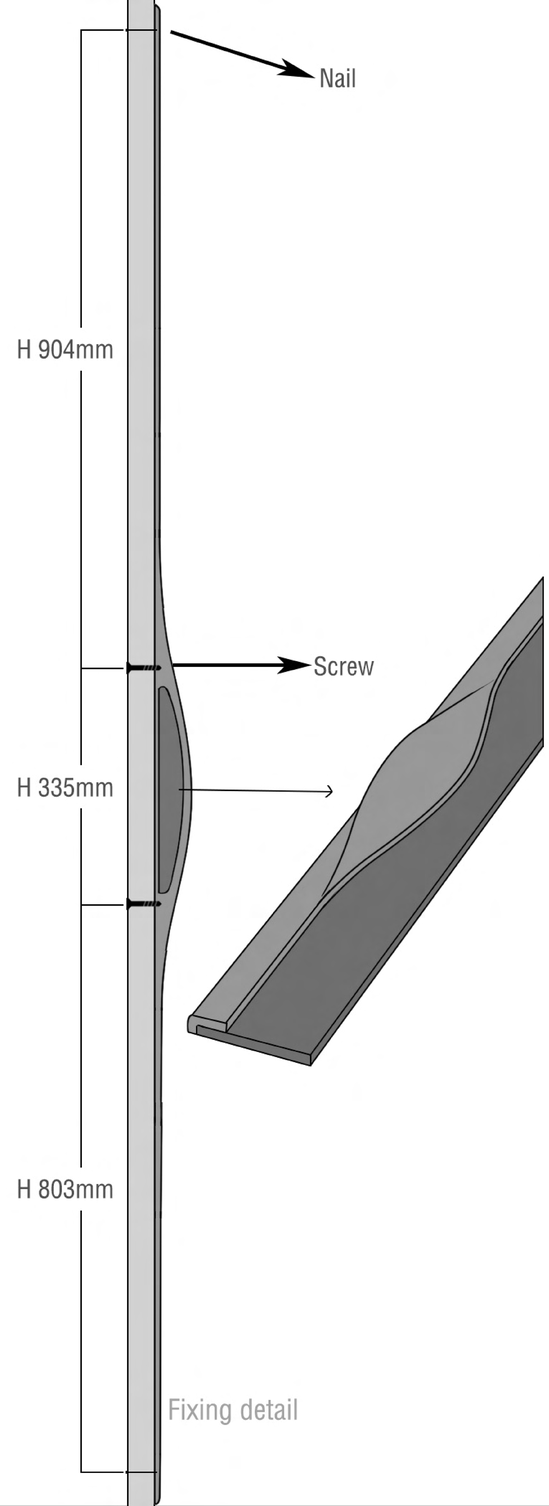

Fixing detail

Artistick's...